COMMERCIAL DRYERS

Featuring Mechanical Controls

FOR YOUR CUSTOMERS

- Large Capacity is Ideal for Family-Size Loads
- Increased Capacity Allows Large Loads to Tumble and Spread Reducing Dry Time
- 3 Cycle Options: Regular/Heavy, Permanent Press and Knits/Delicates
- Easy-To-Follow Console Instructions
- 180° Wide-Opening Side-Swing Door Allows For Convenient Access

IMPROVED AIRFLOW SYSTEM

- New Blower Housing Wave Insert Increases Air Velocity Up to 10%
- Increases Efficiency, Heating Element Life Span and Improves Fabric Care†

†Results per Whirlpool® dryer testing conducted 07/03 – 08/04.

CEM2760TQ—27″ Electric Dryer with Metercase
CGM2761TQ—27″ Gas Dryer with Metercase

Machine Accepts the Following Compatible Payment Systems (not included):
- — Coin Slide
- — Retrofit Coin-Drop
- — Retrofit Card Reader
- — OPL Push-to-Start Kit (No Coins Needed)

- 7.4 Cu. Ft. Drum Capacity
- Push-Button Controls
- 3 Cycles: Regular/Heavy (High Heat), Permanent Press (Medium Heat), and Knits/Delicates (Low Heat)
- 3 Timing Cycles Possible with Included Cams*
- Large Removable, Door-Mounted Lint Screen (84 Sq. In.)
- 180° Wide-Opening Side-Swing Door
- Porcelain Top, Powdered Paint Cabinet
- Rust-Proof Stainless Steel Torx® Control Panel Screws
- Front Service Accessibility
- 4-Way, Multi-Vent Options
- Electric Model Features Element Rated at 5600 Watts, 240 Volt
- Gas Model Features a 22K BTU Burner
- Motor: 1/3-HP with Built-In Overload Protector; Centrifugal Switch Turns Off Heating Element When Motor Stops
- Easy-To-Follow Console Instructions
- **3 Year Limited Parts Only Warranty****

*45-Minute Timing Cam Installed, 30- and 60-Minute Cams Included.
**Call 1-800-NO-BELTS for warranty details.

SINGLE OPERATING THERMOSTAT

For simple accurate temperature control.

LARGE CAPACITY METERCASE

- Larger Coin Box for Reduced Collections
- Accepts Coin Slide, Coin-Drop and Card Reader Configurations

FRONT LOCK READY

- Factory-Installed Lock Blank Provides a Visual Vandalism Deterrent
- Optional Front Panel Lock Assembly (Part #358290) for Added Security of Tying Front and Top Panels Together

COMMERCIAL DRYERS

Featuring Mechanical Controls

Whirlpool® Commercial Dryer Mechanical Controls

DRYER SPECIFICATIONS		
MODELS	**CEM2760TQ▲**	**CGM2761TQ•**
GENERAL INFORMATION		
Stainless steel look push-button console, white enamel drum, porcelain finish top, powdered paint cabinet, front panel lock blank factory-installed, removable lint filter, improved metercase, 4-way venting	Metercase Model Accepts the Following Payment Systems: Coin Slide, Retrofit Coin-Drop, Retrofit Card Reader, OPL Push-to-Start	Metercase Model Accepts the Following Payment Systems: Coin Slide, Retrofit Coin-Drop, Retrofit Card Reader, OPL Push-to-Start
DRUM VOLUME	7.4 Cu. Ft.	7.4 Cu. Ft.
MOTOR	1/3-HP Single-Speed Motor with Built-In Overload Protector, 5.9 Amps Max Rating	1/3-HP Single-Speed Motor with Built-In Overload Protector, 5.9 Amps Max Rating
ELECTRICAL REQUIREMENTS	3-Wire Nominal 240/208 Volt, 60 Hz, A.C., Standard 30 Amp Breaker/Fuse Branch Circuit per Dryer (Subject to Local Codes)	Nominal 120 Volt, 60 Hz, A.C., Standard 15 Amp Breaker/Fuse Branch Circuit per Dryer (Subject to Local Codes)
HEATER TYPE	Electric	Gas*
HEATER/BURNER RATING (Add 500 Watts Approx. for Motor on all Dryer Models)	Heater Rated at 5600 Watts	22,000 BTU Natural Gas
OPERATIONAL AMPERAGE (Does Not Include Control or Gas Valve)	Motor – 4.0 Amps No Load, Heater – 23.33 Amps @ 240 Volt 27.33 Total	Motor – 4.0 Amps, No Load
SHIPPING WEIGHT (EST.)	134 Lbs.	135 Lbs.
DIMENSIONS		
Width – in. (cm)	27 (69 cm)	27 (69 cm)
Depth – in. (cm)	28.5 (72.39 cm)	28.5 (72.39 cm)
Height – in. (cm)	43** (109 cm)	43** (109 cm)

*Burner orifices are available for manufactured, natural, mixed and LP gas with varying BTU ratings. **Height at metercase top. ▲ Power cords on electric models sold separately. • LP Conversion Kit: 49572. Energy information is available online at www.whirlpoolcommerciallaundry.com/products.

Dimensions are for planning purposes only. For complete information, see installation instructions packed with product.

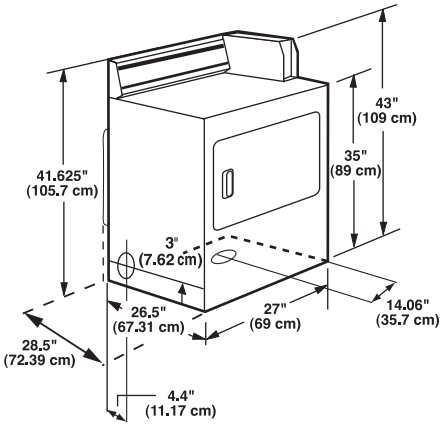

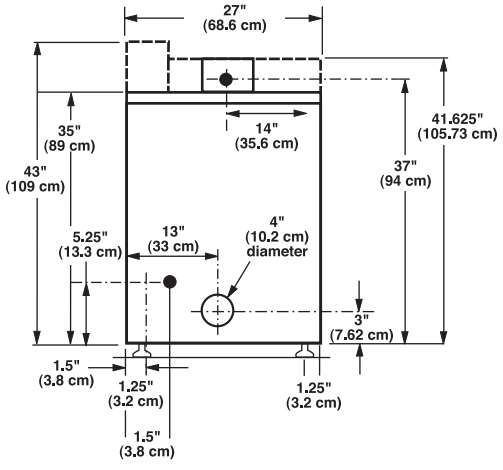

Exhaust Information

All dryers require the equivalent of a 4-inch diameter exhaust duct. Rigid metal duct is recommended. Failure to properly exhaust the dryer will result in improper operation.

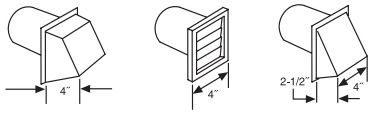

27" & 29" Dryer Venting Requirements

# of 90° turns	4" Hood	2 1/2" Hood
Maximum Length of 4" Diameter Rigid Metal Duct		
0	64 Ft.	58 Ft.
1	54 Ft.	48 Ft.
2	44 Ft.	38 Ft.
3	35 Ft.	29 Ft.
4	27 Ft.	21 Ft.
Maximum Length of 4" Diameter Flexible Metal Duct		
0	36 Ft.	28 Ft.
1	31 Ft.	23 Ft.
2	27 Ft.	19 Ft.
3	25 Ft.	17 Ft.
4	23 Ft.	15 Ft.

3 YEARS LIMITED PARTS ONLY WARRANTY

For a period from the date of original purchase through the time listed above, the designated parts that fail in normal commercial use will be repaired or replaced free of charge for the part itself, with the owner paying all other costs, including labor, transportation and customs duty. Chemical damage is excluded from all warranty coverage. See complete warranty for details.

To Locate a Distributor Near You, Please Visit www.whirlpoolcommerciallaundry.com/distributor, or call 1-800-NO-BELTS

TORX is a registered Trademark of Textron Industries, Inc.
®Registered trademark/™Trademark of Whirlpool, U.S.A. ©2011 Whirlpool Corporation. All rights reserved.
Whirlpool Corporation • Benton Harbor, Michigan 49022 U.S.A.

CWLL131 7/11